DIMENSIONS

Streamline

Rough-In Dimensions

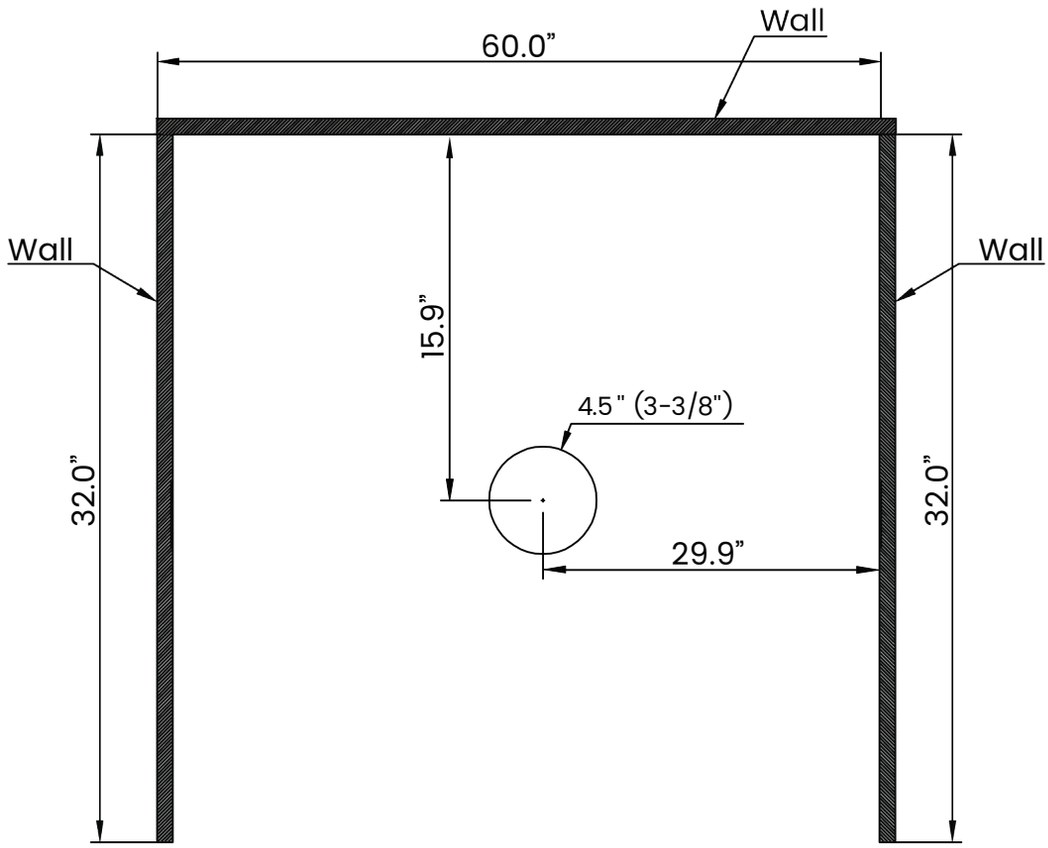

Product Dimensions

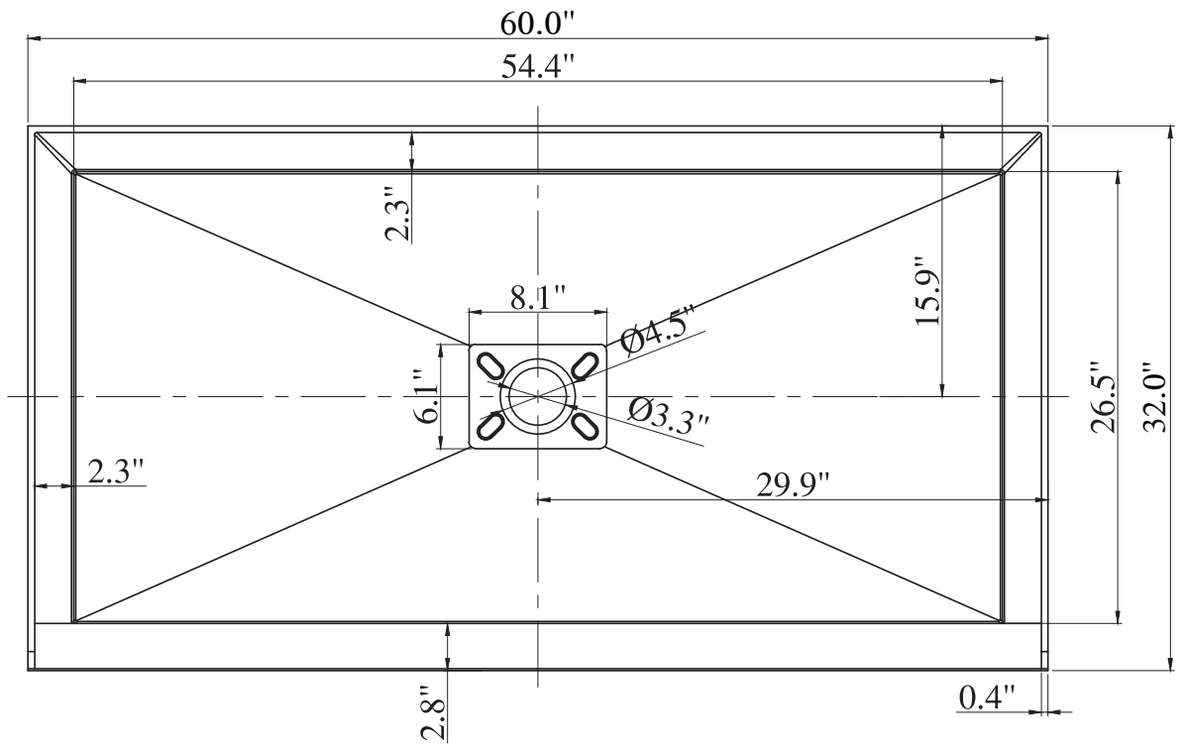

DIMENSIONS

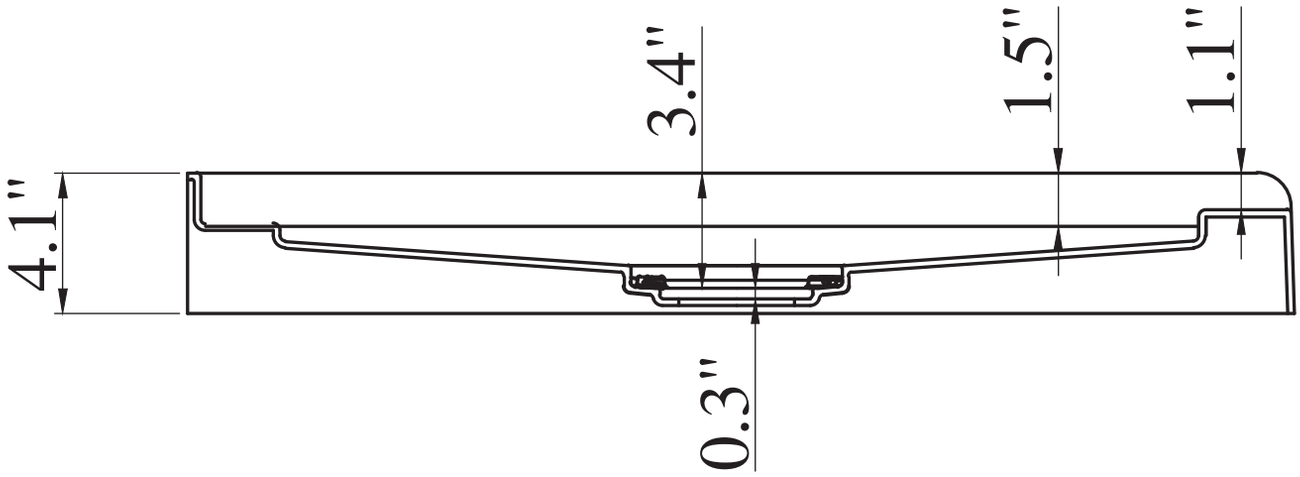

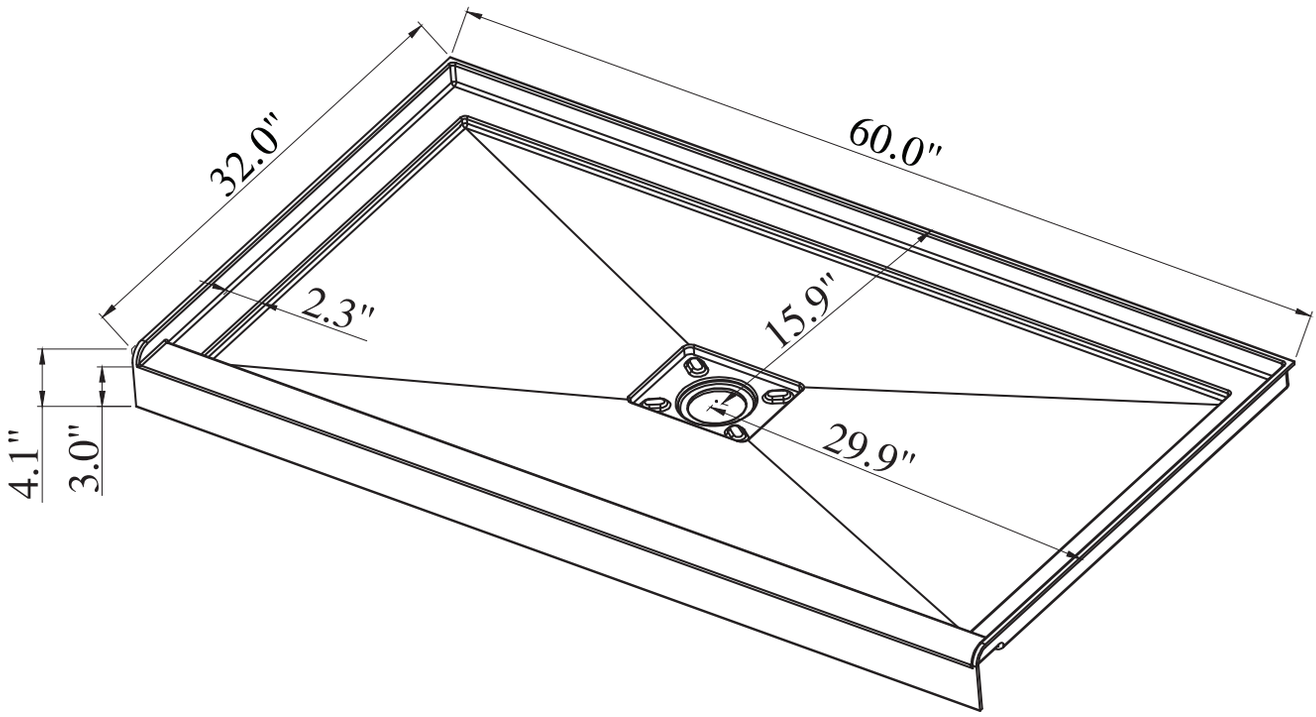

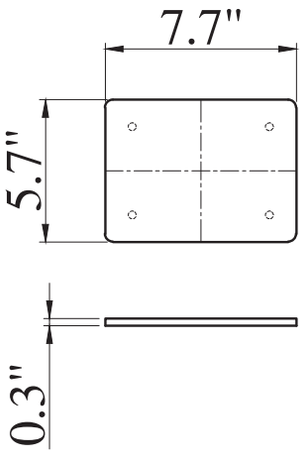

Model number:
P-120-CH

DIMENSIONS
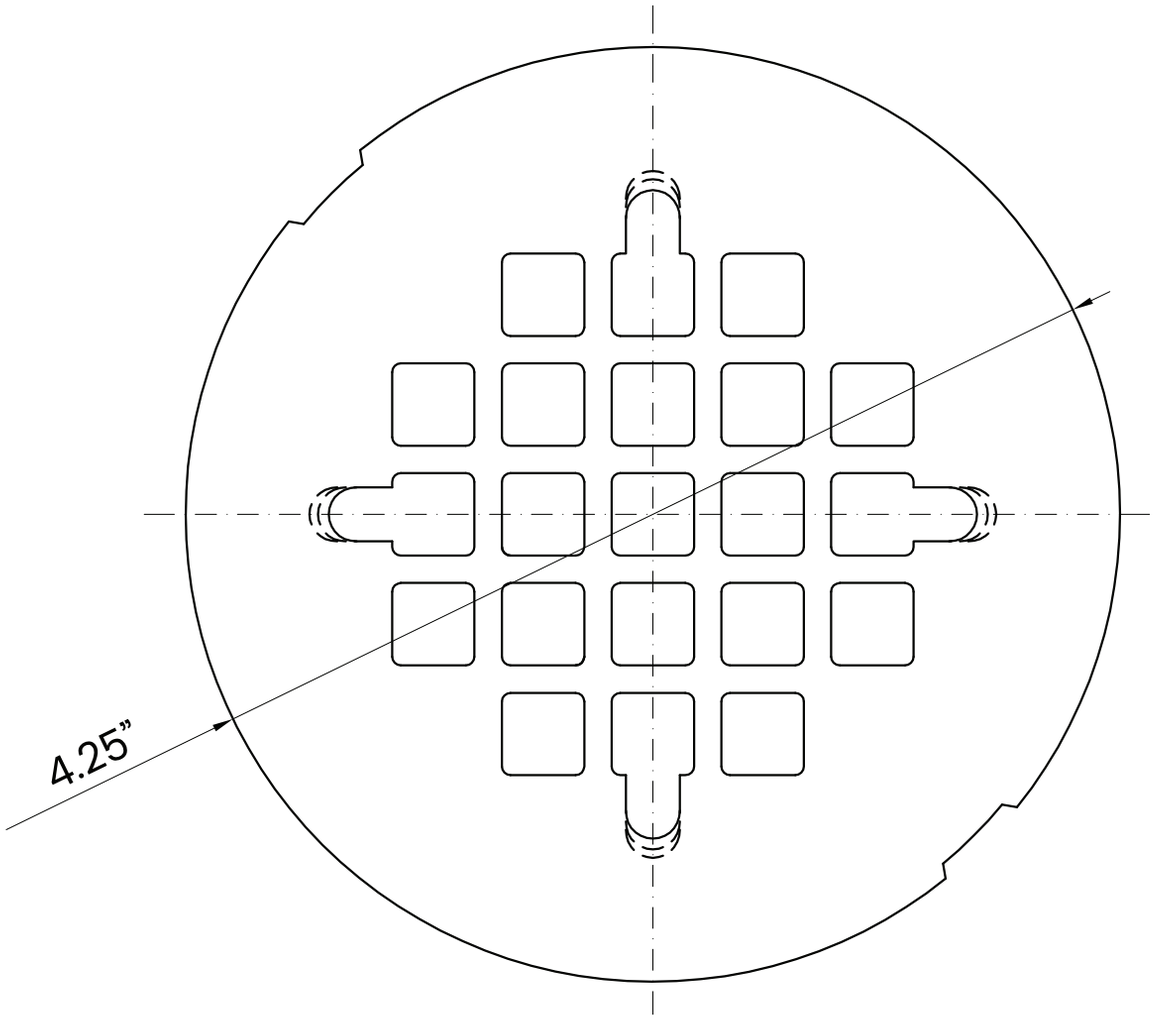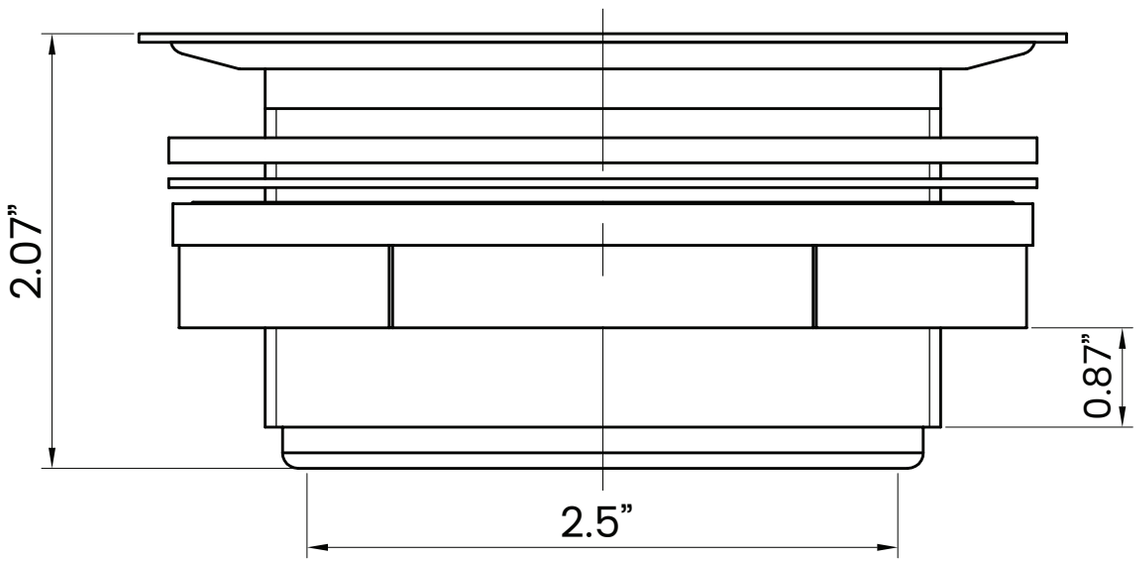
Streamline