Streamline

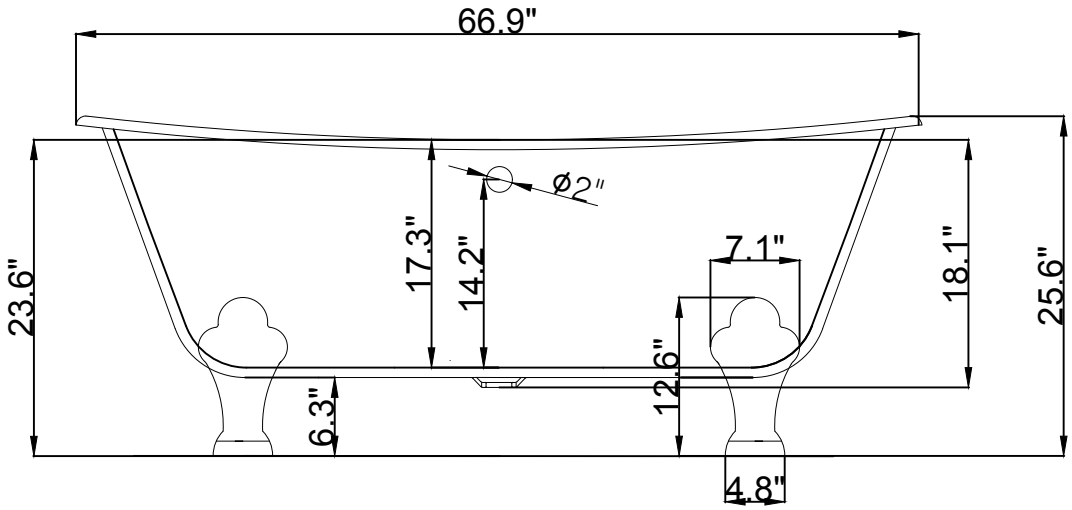

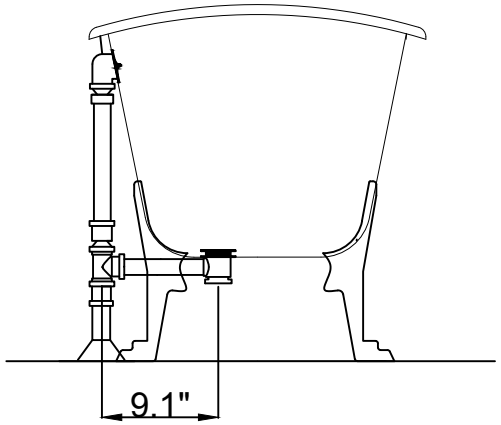

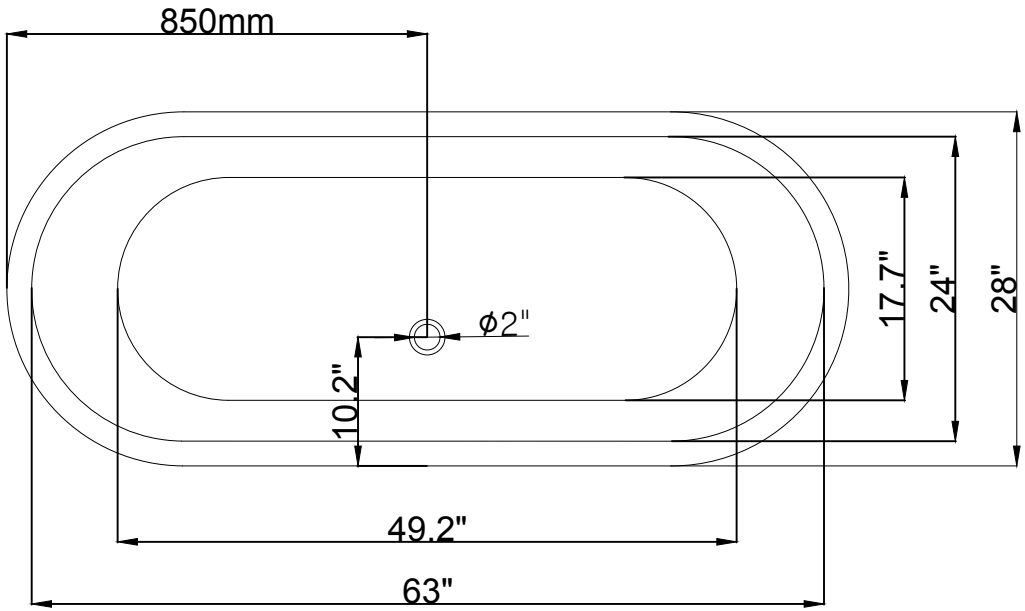

R-5061-67CICFWH-FM