Streamline

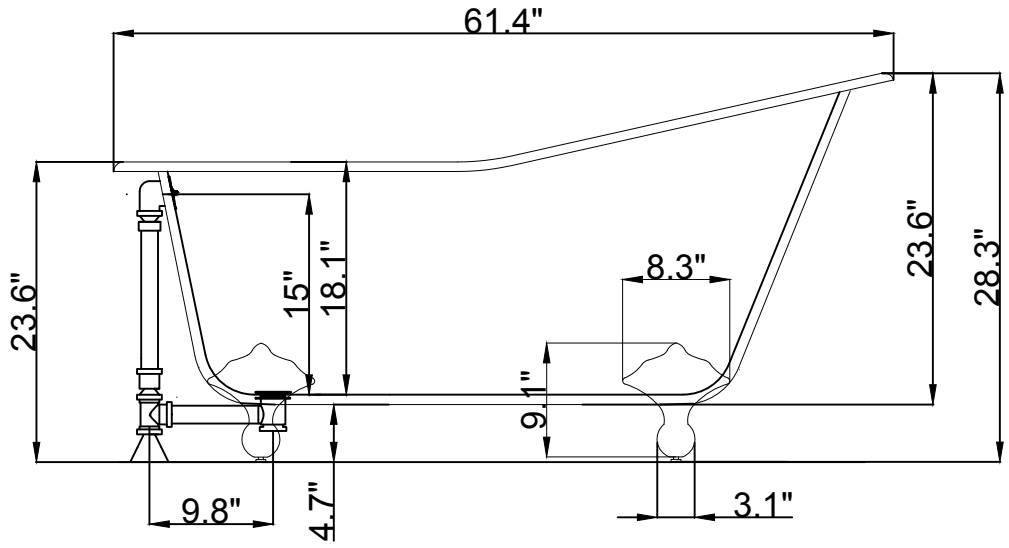

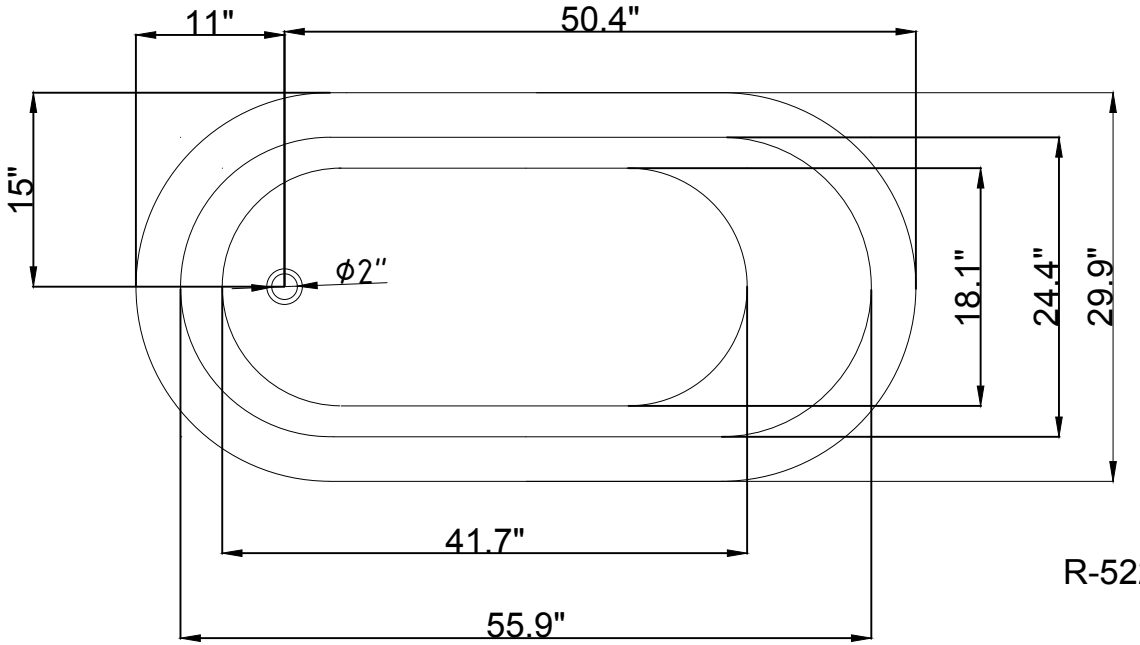

R-5221-61CICFWH-FM