Streamline

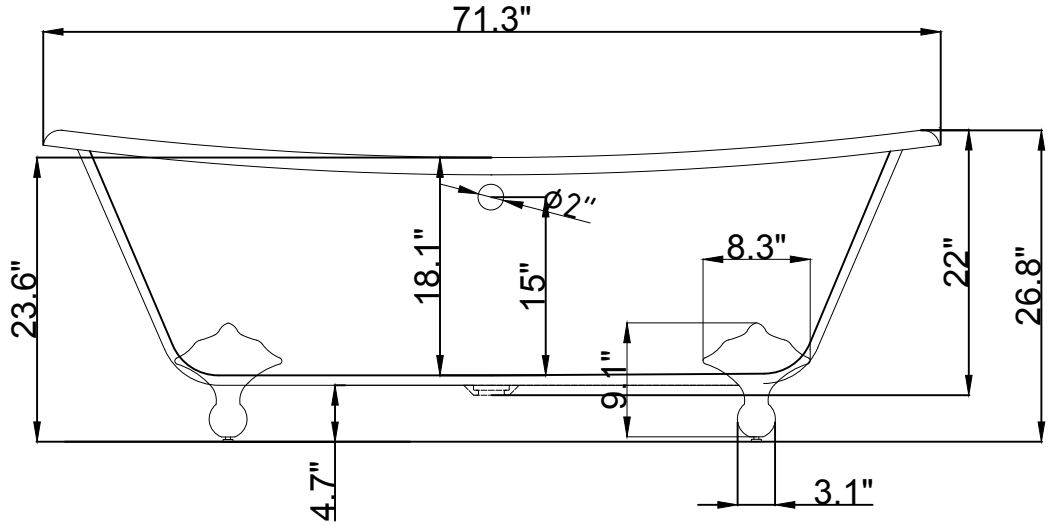

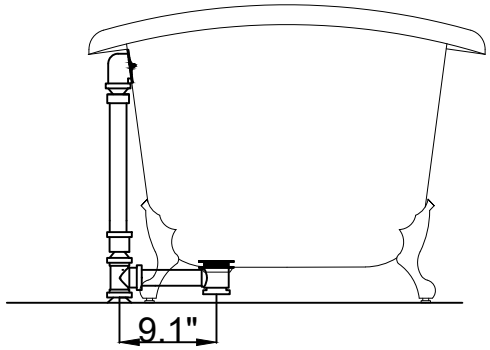

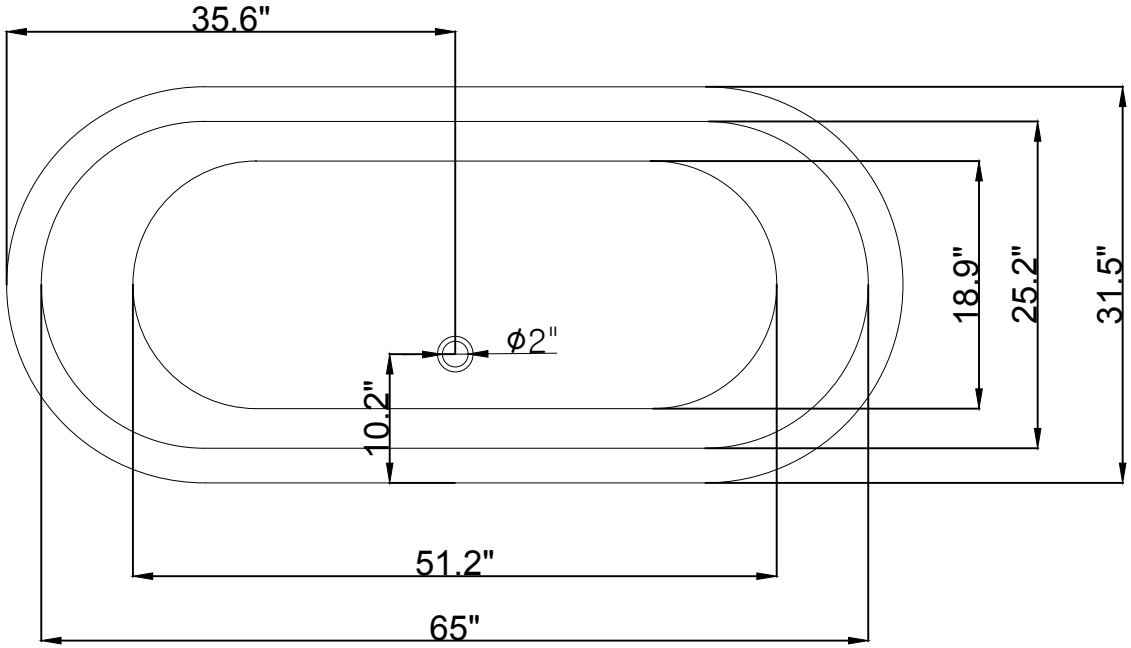

R-5240-71CICFWH-FM