DIMENSIONS

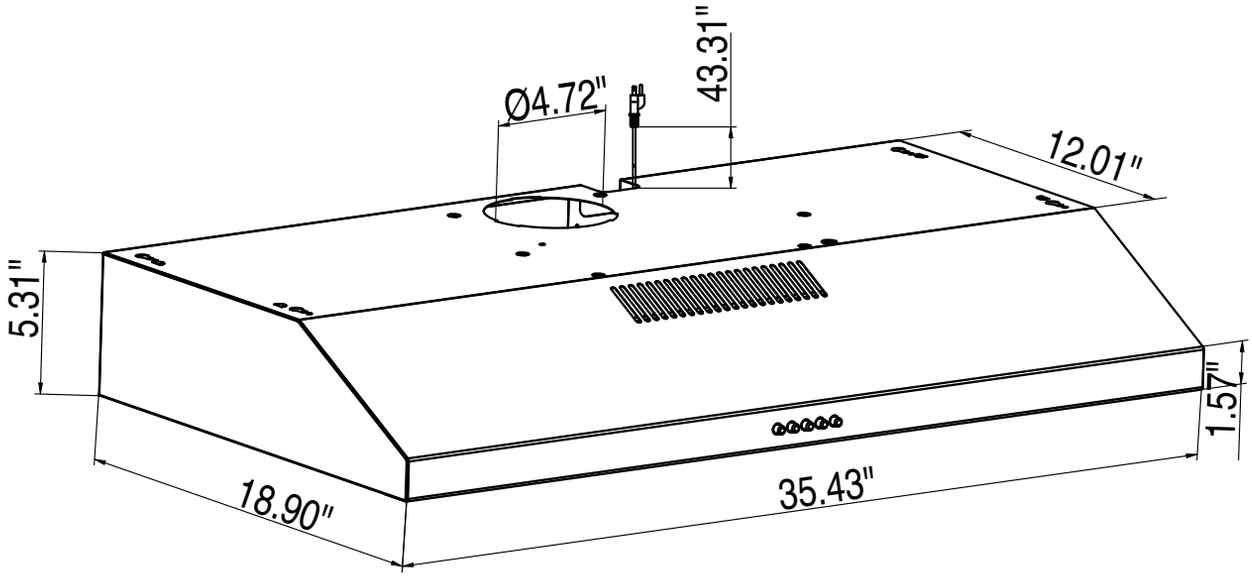
Ø4.72"
43.31"
12.01"
5.31"
1.57"
18.90"
35.43"

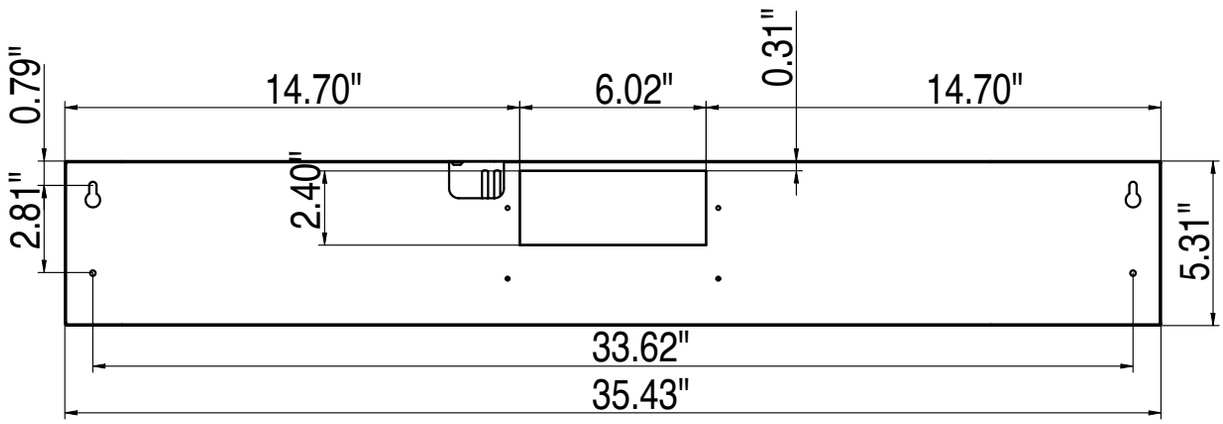
0.79"
14.70"
6.02"
0.31"
14.70"
2.81"
2.40"
5.31"
33.62"
35.43"

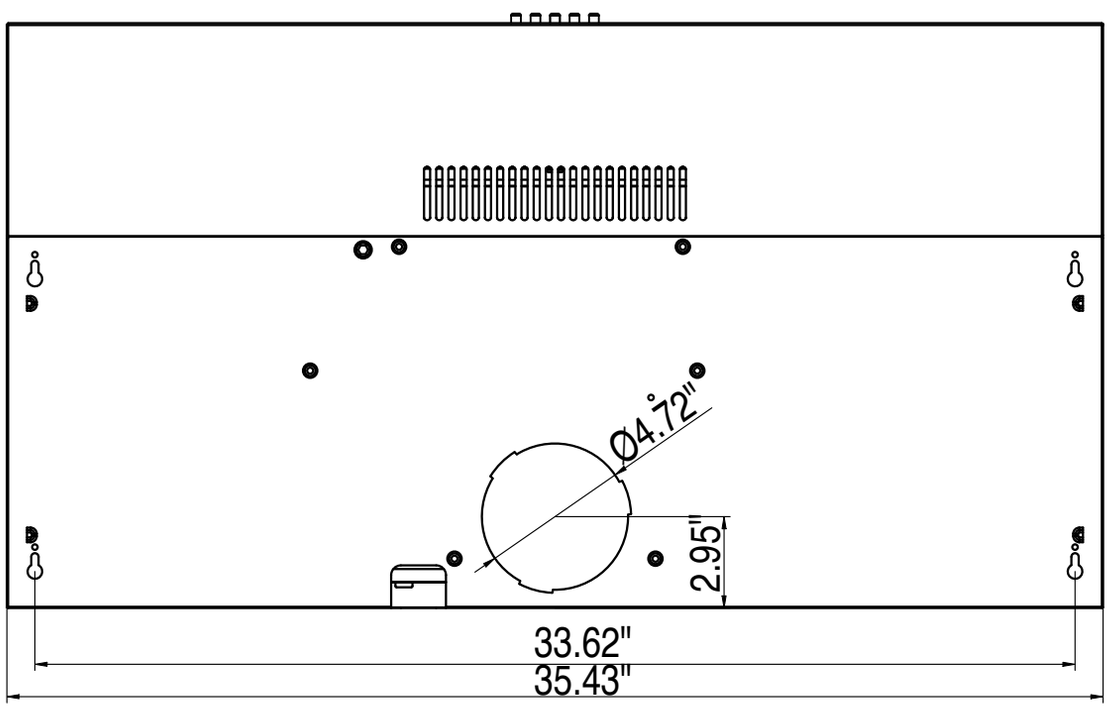
Ø4.72"
2.95"
33.62"
35.43"

DIMENSIONS

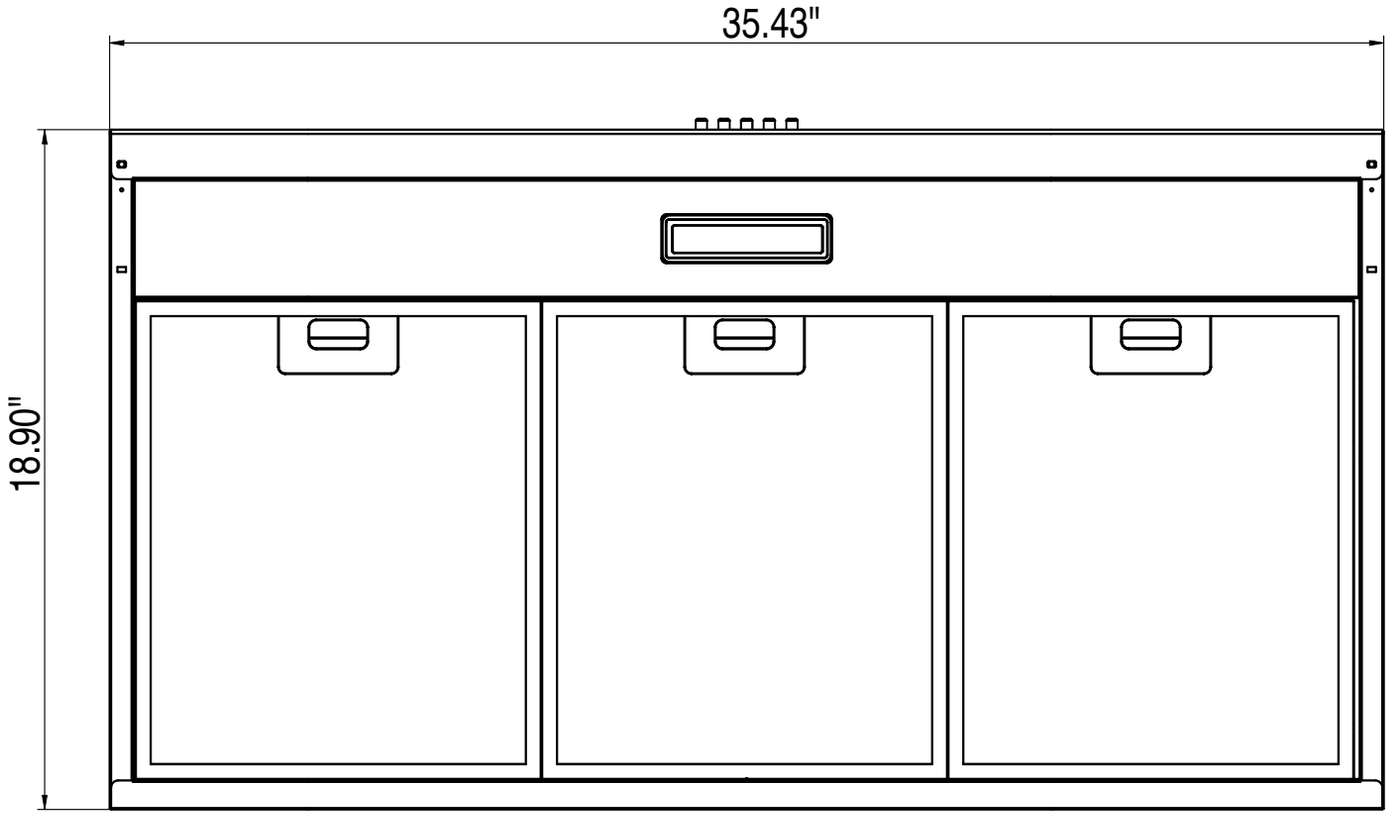

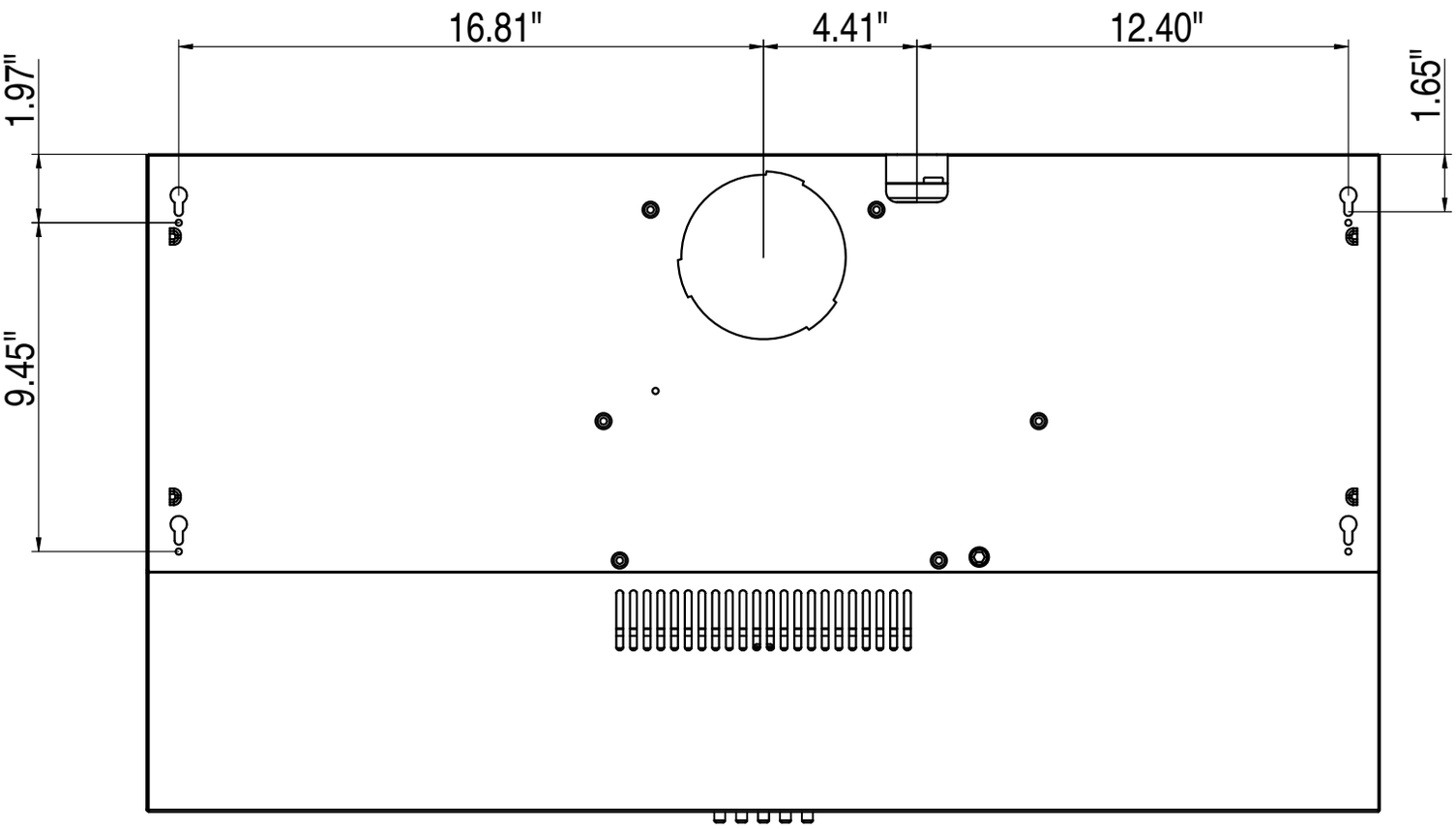
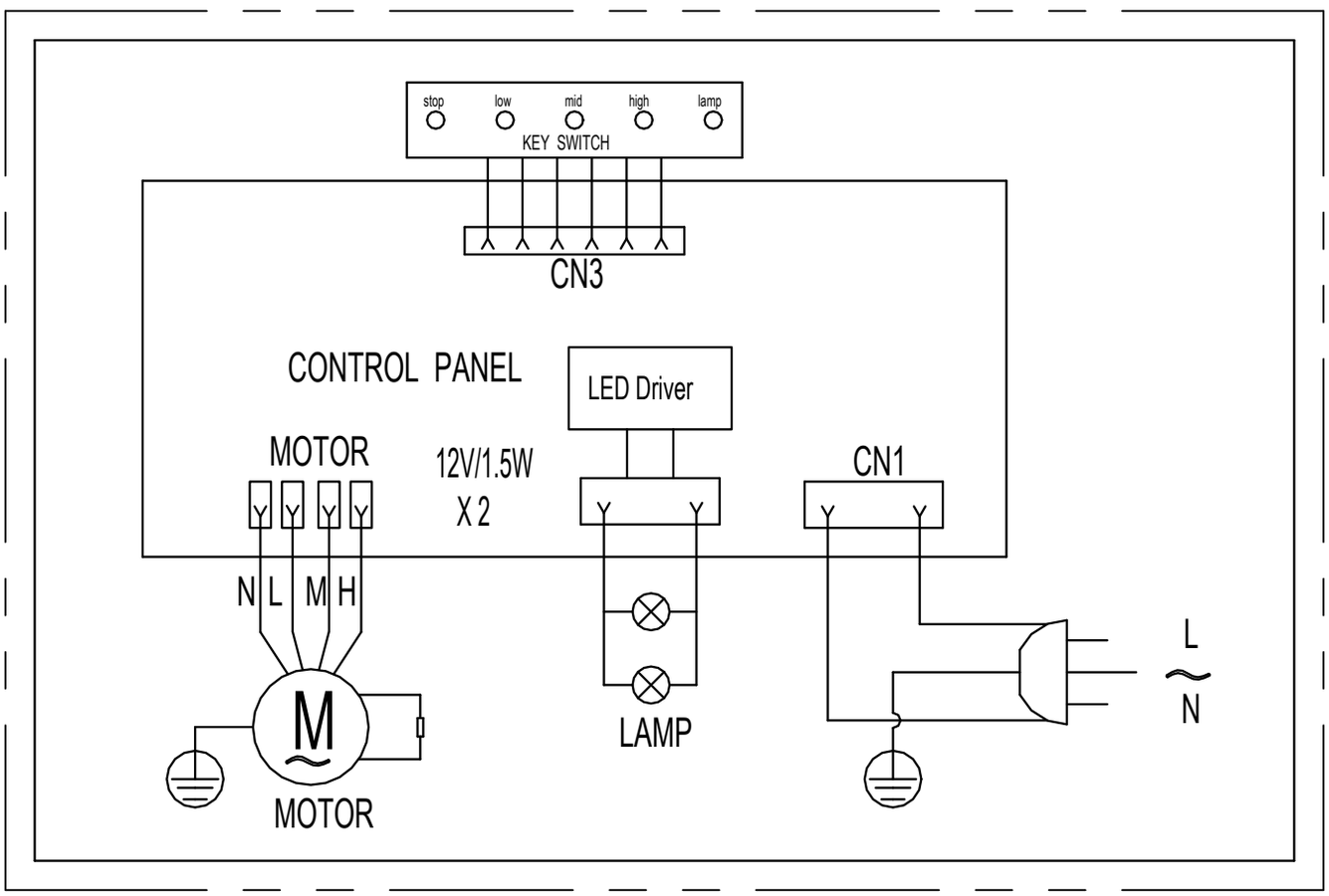
Electrical Wiring Diagram