DIMENSIONS

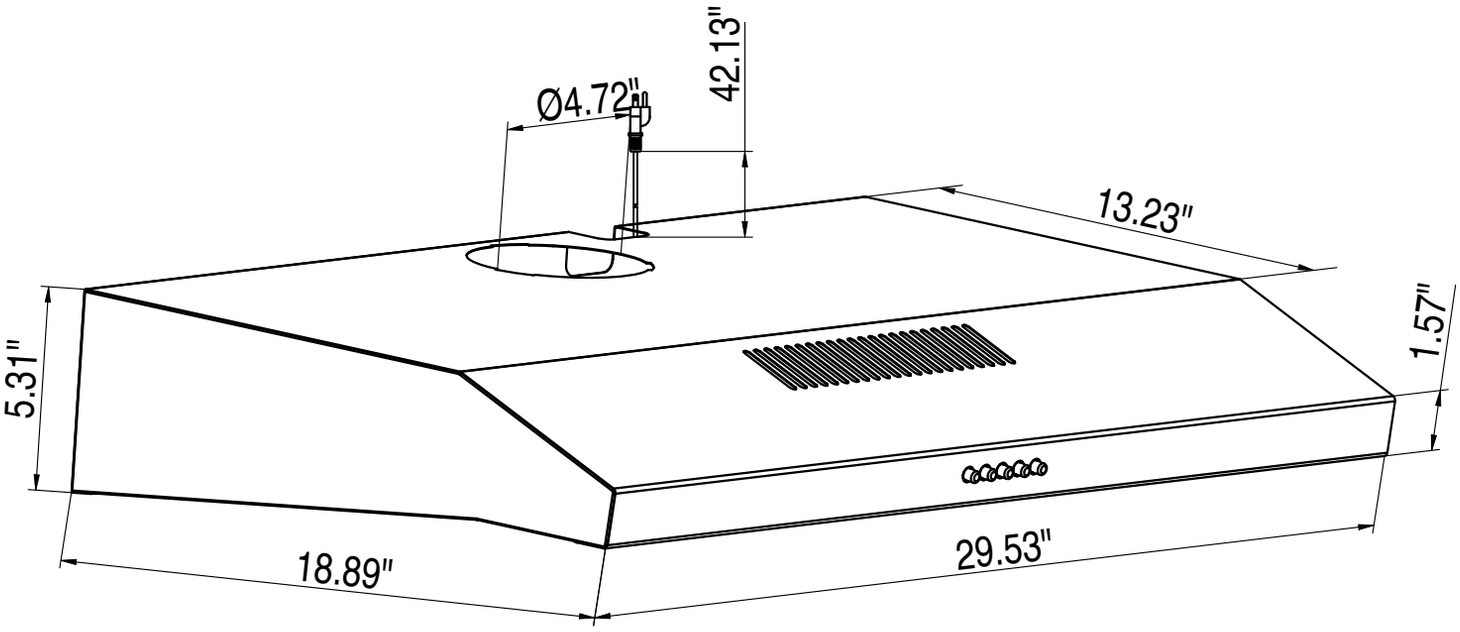
Ø4.72"
42.13"
13.23"
5.31"
1.57"
18.89"
29.53"

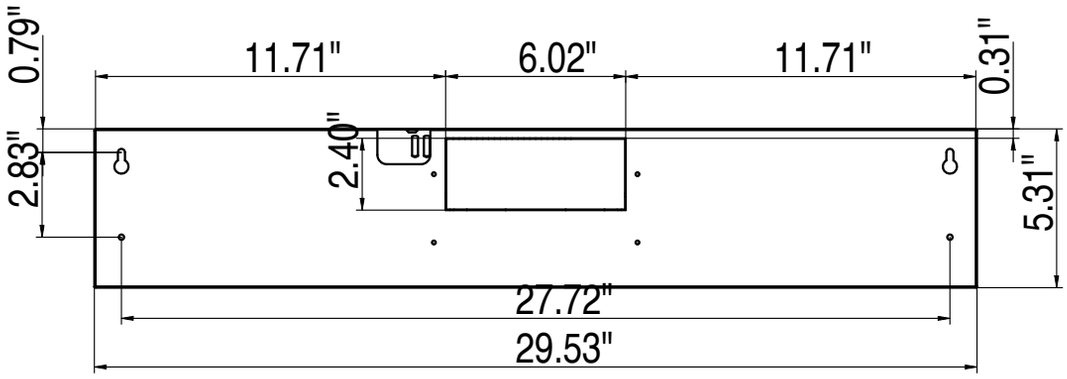
0.79"
11.71"
6.02"
11.71"
0.31"
2.83"
2.40"
5.31"
27.72"
29.53"

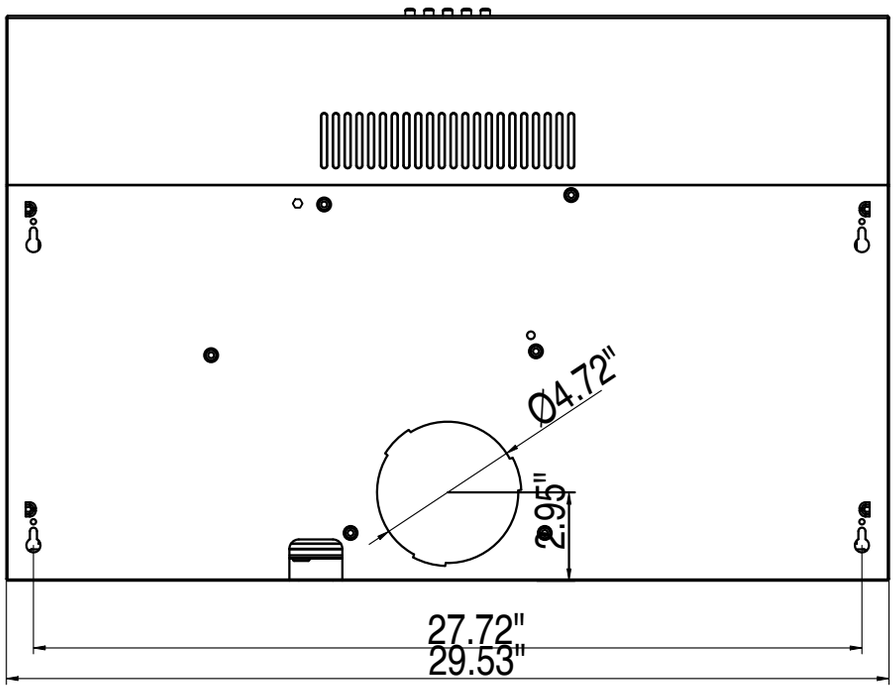
Ø4.72"
2.95"
27.72"
29.53"

DIMENSIONS

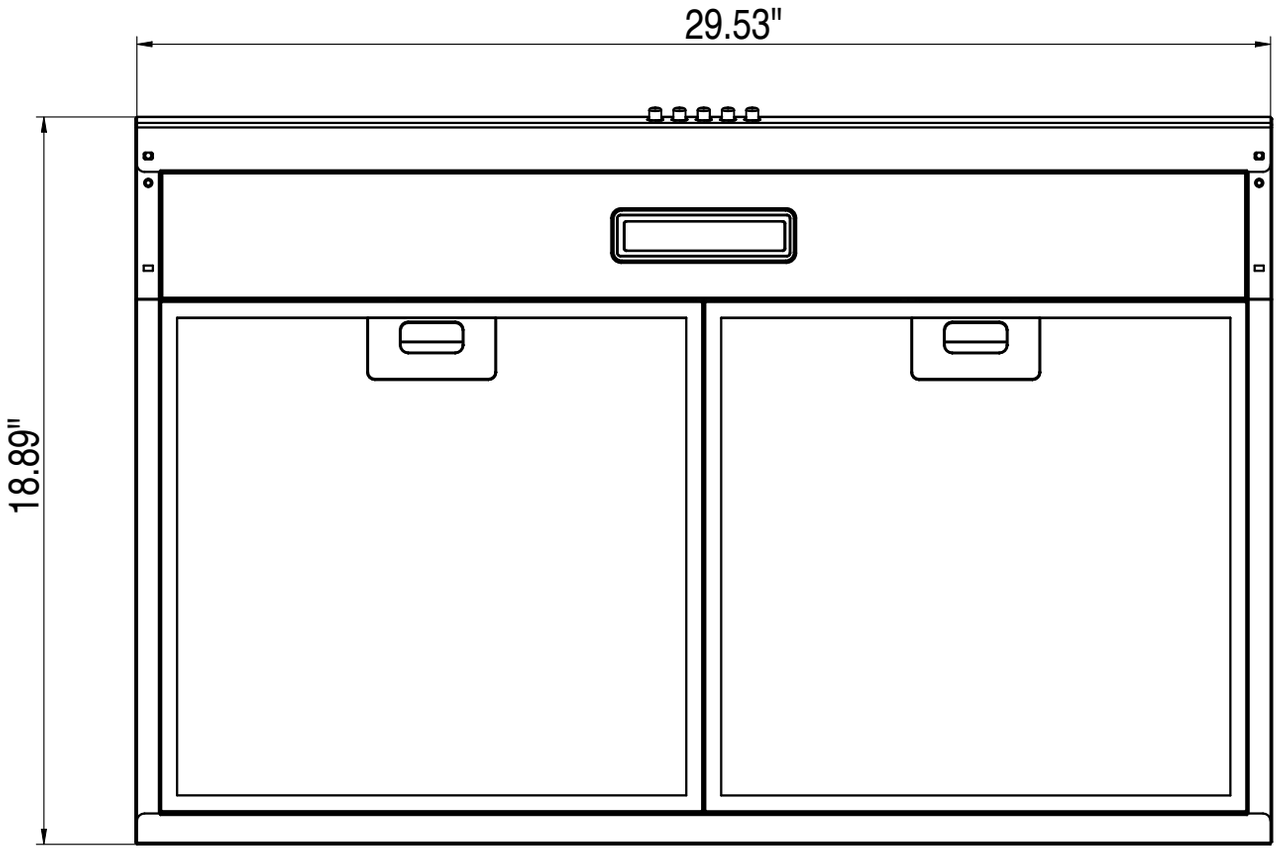

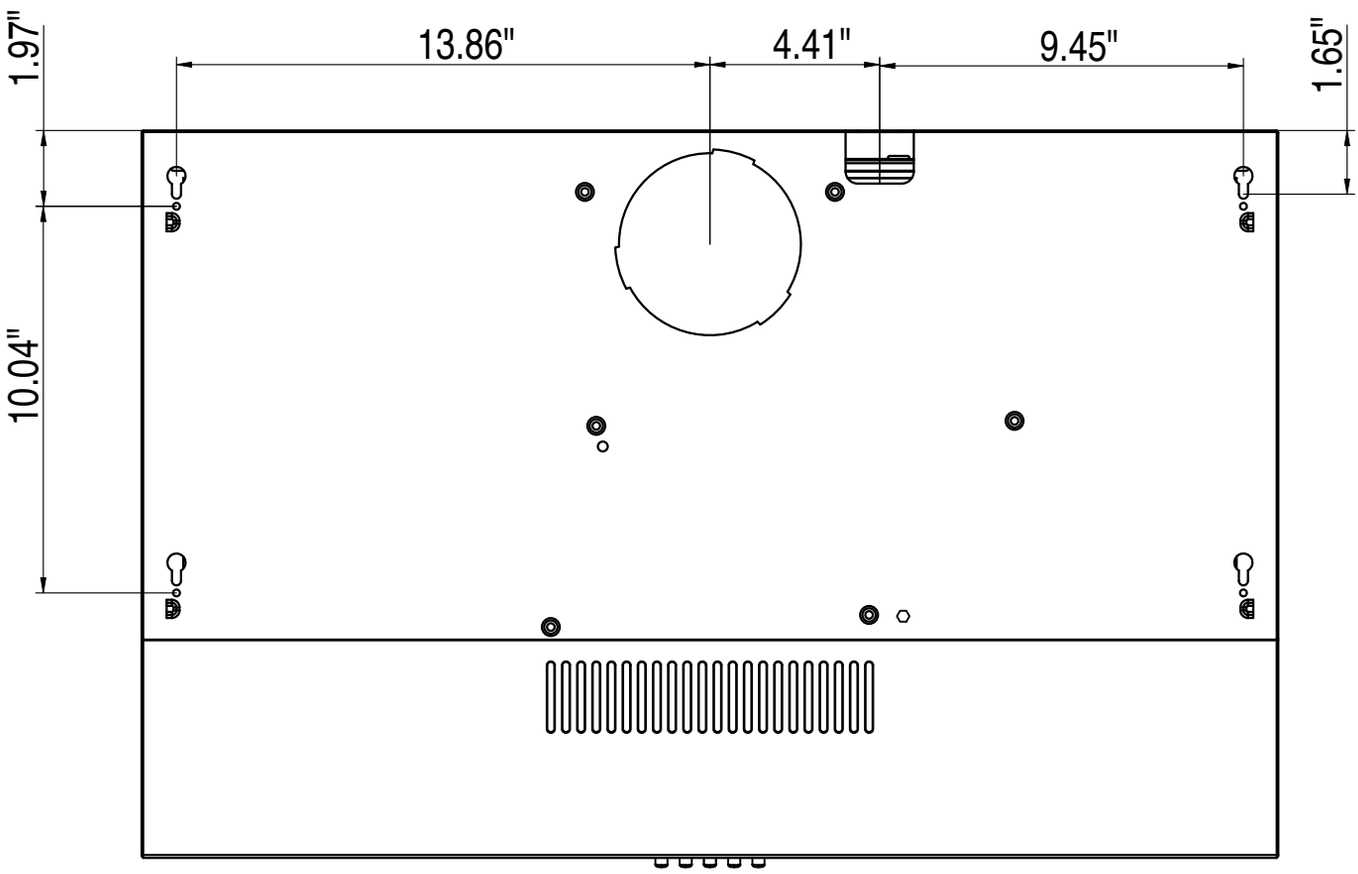
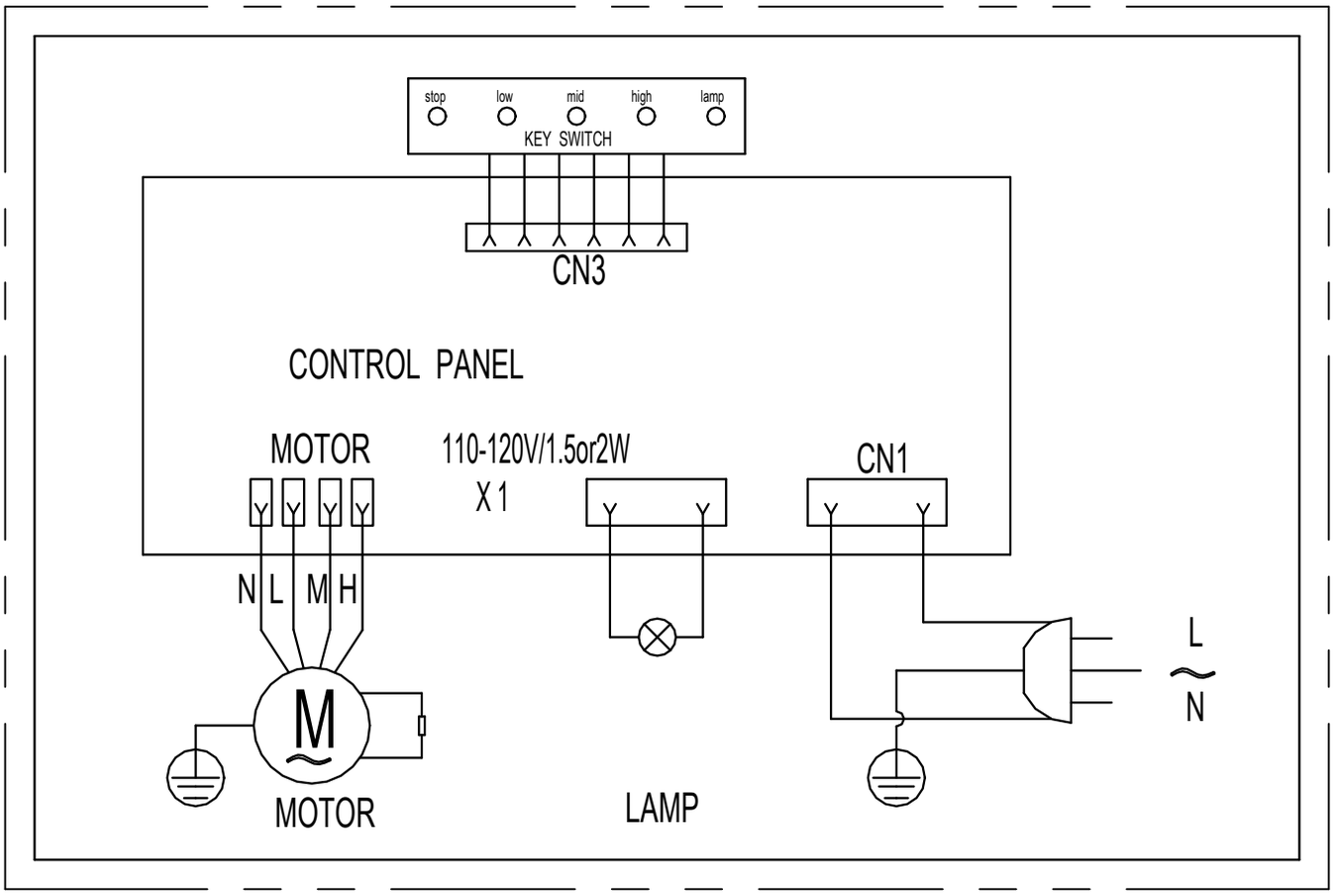
Electrical Wiring Diagram